NOTES:
1. MAX. MOUNTING TORQUE = 6 lb-in.
2. HARDWARE IS INCLUDED.

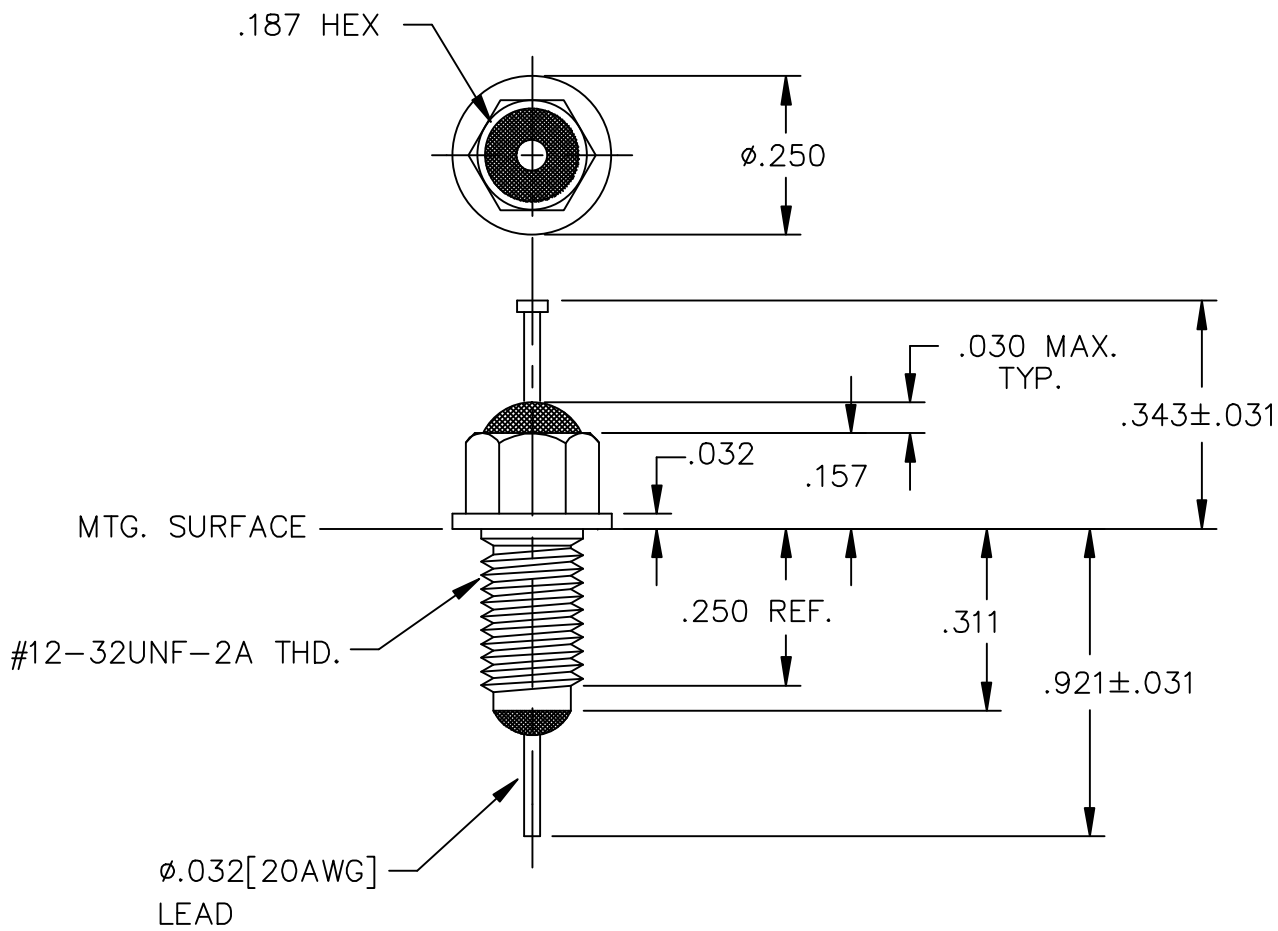

LEAD FINISH:	SOLDER
BUSHING FINISH:	SILVER
CAPACITANCE	0.1uF MIN.
TEMP. RANGE	-55°C TO 125°C
CURRENT	10 AMP MAX.
WORKING VOLTAGE	85°C 100 VDC MAX. 125°C 100 VDC MAX.
D.C. RESISTANCE	.01ohms MAX.

MIN. I.L. PER MIL-STD-220 AT 25°C NO LOAD

FREQ. MHz	I.L. (db)
1	10
3	40
10	65
100	70
1 GHz	70
10 GHz	70

SCHEMATIC

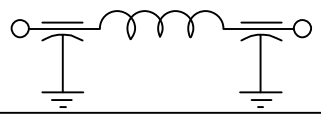

MARKING:
PART: S3313000
BAG:
SCI-3313-000
DATE CODE
LOT NO.
03 QTY. (200 PCS. MAX.)

REV. NO.	CHANGE NOTICE
3	CN #2640
2	CN 201767
1	CN 190709
0	CN. 178797

TOLERANCES UNLESS OTHERWISE SPECIFIED
Fractions ± 1/64
Dec. .xx±
Dec. .xxx±.010
Angles ±0° 30'

CODE IDENT. NO. OLSP2

api technologies corp.
FAIRVIEW PENNSYLVANIA

Dwn. KAUFFMAN
Ckd. 3-19-14
Scale NONE

Description Pi
RESIN SEAL FILTER

SCI-3313-000